Pre-Rinse Conversion Kit

TECK® COMMERCIAL

DELTA

Specification: (example)

❑ **063019A**
Pre-Rinse Conversion Kit

- Pre-rinse conversion kit for Chicago Faucet, T&S Brass, Fisher and other manufacturers with a 9.5 mm 3/8″ Female Iron Pipe body outlet thread.
- Includes 9.5 mm (3/8″) heavy duty IPS rigid riser, 305 mm (12″) wall bracket, spray valve hook, gooseneck spring, stainless steel hose, insulated handle grip, spring loaded spray valve, hold open ring.
- Integral faucet check stops or supply line check valves are required to prevent cross flow (not supplied).
- Standard spray outlet is 1.6 GPM (6.08 L/min) @ 60 PSI.
- Also supplied with energy saver spray face (1.2 GPM (4.56 L/min) @ 60 PSI).

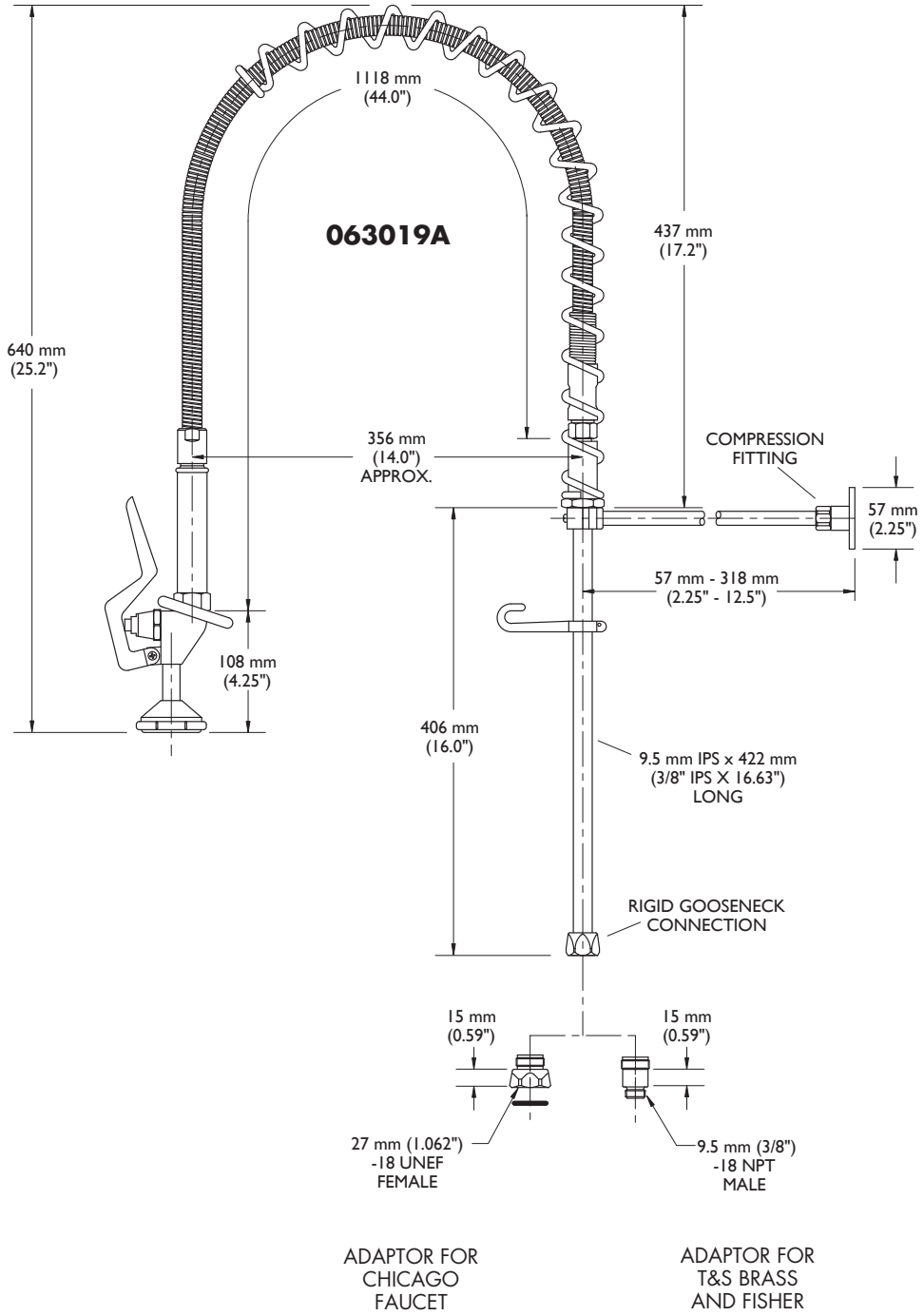

C US

Approvals:

- CSA certified
- Complies to ASME A112.18.1/CSA B125.1
- Verified compliant with 0.25% weighted average Pb content regulations
- "For Commercial Use Only"

(Contact Delta Representative for State and/or Local Approvals.)

Refer to www.specselect.com for individual models.

Note: Use this page front and back as a product submittal sheet.

Delta reserves the right (1) to make changes in specifications and materials, and (2) to change or discontinue models, both without notice or obligation. Dimensions are for reference only. See current full-line price book or www.specselect.com for finish options and product availability.