NEWPORT BRASS®
Flawless Beauty. From Faucet to Finish.™

CHESTERFIELD

Bridge Style Lavatory Faucet

1030B

Features

- Solid brass construction
- Bridge-style brass valve bodies
- Quarter-turn washerless ceramic disc valve cartridges
- ADA compliant traditional lever handles
- Swivel spout assembly
- Pop-up knob assembly with drain and tailpiece
- 4-3/16" (10.6 cm) spout height at outlet
- 5-1/8" (13.0 cm) spout reach (c-c)
- For 8" (20.3 cm) centers - Maximum 9-3/4" (24.9 cm)
- 1.5 gallons (5.7 liters) per minute maximum flow rate

Codes / Standards Compliance

Meets or exceeds the following at date of manufacture:

- ASME A112.18.1/CSA B125.1
- IAPMO/cUPC
- IPC
- NSF 61
- ADA
- ICC/ANSI A117.1
- Energy Policy Act of 1992
- All applicable US Federal and State material regulations
- EPA WaterSense®

Colors / Finishes

- 10B: Oil Rubbed Bronze
- 15: Polished Nickel
- 15A: Antique Nickel
- 26: Polished Chrome

- Other: Refer to the Newport Brass catalog for additional color/finish options.

Specified Model

Model	Description	Colors / Finishes	
1030B	Bridge Style Lavatory Faucet	☐ 10B ☐ 15 ☐ 15A ☐ 26	☐ Other

Product Specification:

Add "Color / Finish" suffix to Model number, below.

The Bridge Style Lavatory Faucet shall be made of solid brass construction. Faucet shall feature brass valve bodies with quarter-turn washerless ceramic disc valve cartridges. Faucet shall have a 1.5 gallon (5.7 liter) per minute maximum flow rate. Product shall be for 8" (20.3 cm) centers - Maximum 9-3/4" (24.8 cm). Product shall incorporate a 4-3/16" (10.6 cm) spout height at outlet and a 5-1/8" (13.0 cm) spout reach (c-c). Faucet shall include a pop-up knob assembly with drain and tailpiece and incorporate ADA compliant traditional lever handles. Bridge Style Lavatory Faucet shall be Newport Brass Model 1030B/____ .

t: 949.417.5207 | www.newportbrass.com
©2012 Brasstech, Inc.

1030B

Product Dimensions *(units are in inches)*

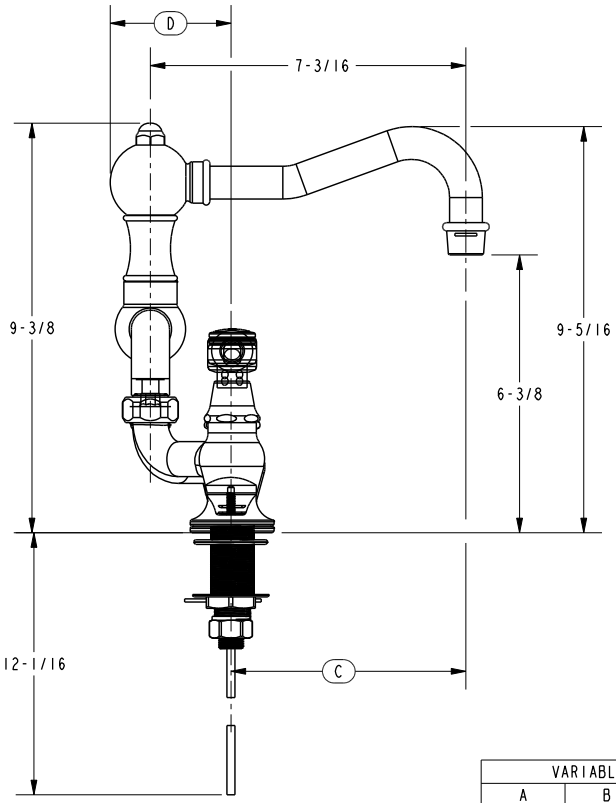

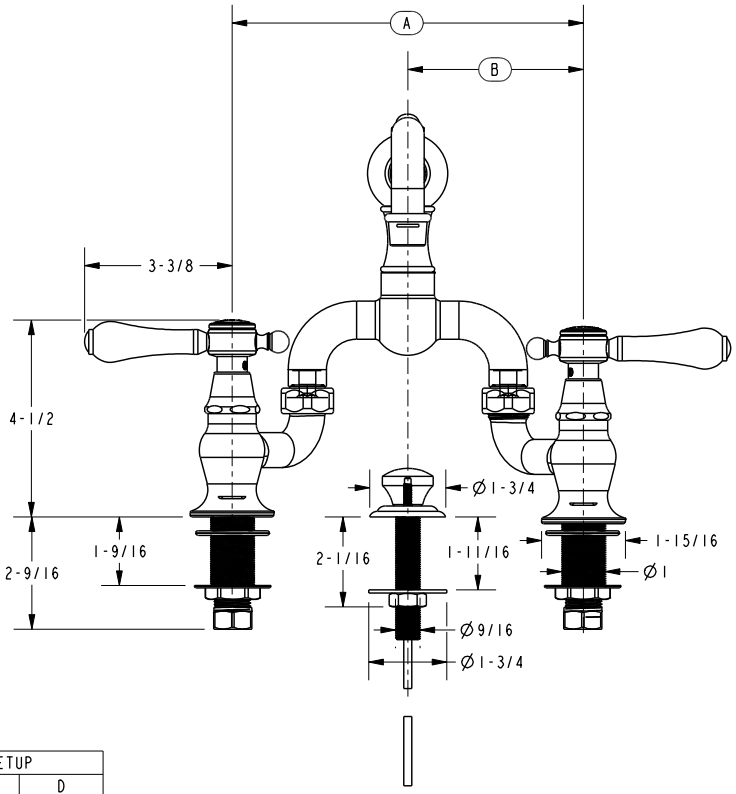

VARIABLE FAUCET SETUP			
A	B	C	D
8	4	5-5/16	2-13/16
9-5/8	4-13/16	7-3/16	15/16

NEWPORT BRASS®
Flawless Beauty. From Faucet to Finish.™

t: 949.417.5207 | www.newportbrass.com

©2012 Brasstech, Inc.