Fernco Inc.
300 S. DAYTON ST.
DAVISON, MI 48423
PH: 810-653-9626
FAX:810-654-2616

QT-300

DESCRIPTION: Qwik Tee 3" x 3" x 3" Cast Iron, Plastic, Steel Copper and Lead to same.

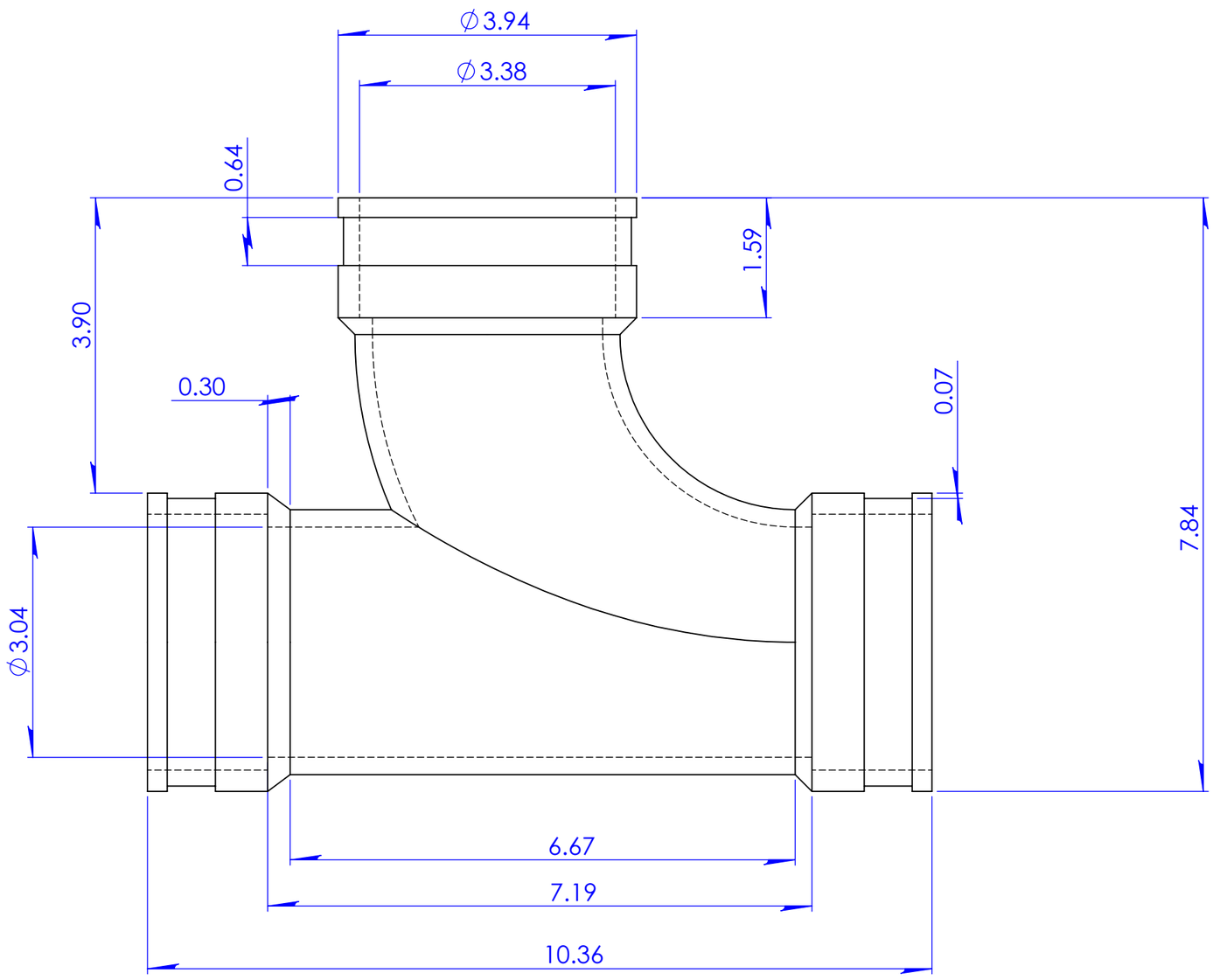

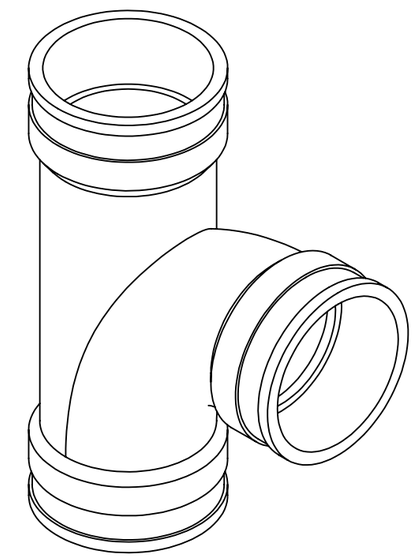

PROPRIETARY AND CONFIDENTIAL
THE INFORMATION CONTAINED IN THIS DRAWING IS THE SOLE PROPERTY OF FERNCO, INC. ANY REPRODUCTION IN PART OR AS A WHOLE WITHOUT THE WRITTEN PERMISSION OF FERNCO, INC. IS PROHIBITED.

TOLERANCES:
.X= Fractional ±
.XX= ±.06
ANG.= ±3°
UNLESS OTHERWISE SPECIFIED

Part Weight	2.18 lbs.	Installation Torque	60" Lbs.
Min/Max Temp.	-30/140 Degrees F	Conforms to ASTM	D5926, C1173
Pressure Tested	4.3 PSI	Clamps used	300 Series
Material	Flexible PVC 60 Duro Shore A	Box Quantity	20

UNITS: INCHES
SIZE: A
3RD ANGLE PROJECTION
DO NOT SCALE DRAWING
DESIGNER: D. Brady
CHECKER:
DATE: 6/6/2011
SCALE: not to scale
SHEET 1 OF 1